KETTLER

FSC
www.fsc.org
100%
Wood from well-managed forests
FSC® C110124

elba Picnic Grande Bench 220x40cm

0393112-0200

IMPORTANT
PLEASE KEEP THIS BOOKLET FOR FUTURE REFERENCE.
THIS IS IMPORTANT INFORMATION REGARDING THE USE AND CARE OF YOUR GARDEN FURNITURE.

20 MINUTES
ASSEMBLY TIME

PERSONS REQUIRED

August 2021

Parts List

(A) Bench Top 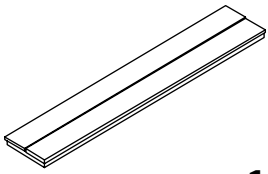 **x1**	(B) Bench Leg 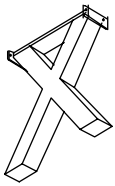 **x2**	(C) Washer 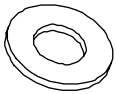 **x8**
(D) Bolt M6x20(mm) 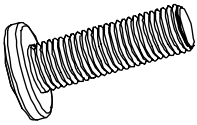 **x8**	(E) Bolt Cover **x8**	(F) Allen Key 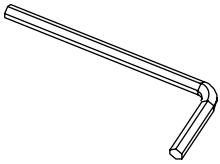 **x1**

Do not discard any of the packaging until you have checked that you have all the parts and the pack of fixings.

Helpful advice before you begin:

1. We suggest you spend a short time reading through this leaflet and then follow the simple step by step instructions.
2. Do not discard any of the packaging until you have checked that you have all the parts and the pack of fittings.
3. Assemble this product on a soft surface.
4. To ensure an easier assembly, we strongly advise that all fittings are only finger tightened during initial assembly. Only upon completion of the assembly should all fixing points be fully tightened.
5. Keep fittings out of children's reach.
6. Do not use any other tools other than those recommended to build this product.
7. Please do not use substitute parts. Use only additional or replacement parts supplied by Kettler.
8. In the unlikely event that this product has missing or damaged parts, please visit our website **www.kettler.co.uk**

Assembly

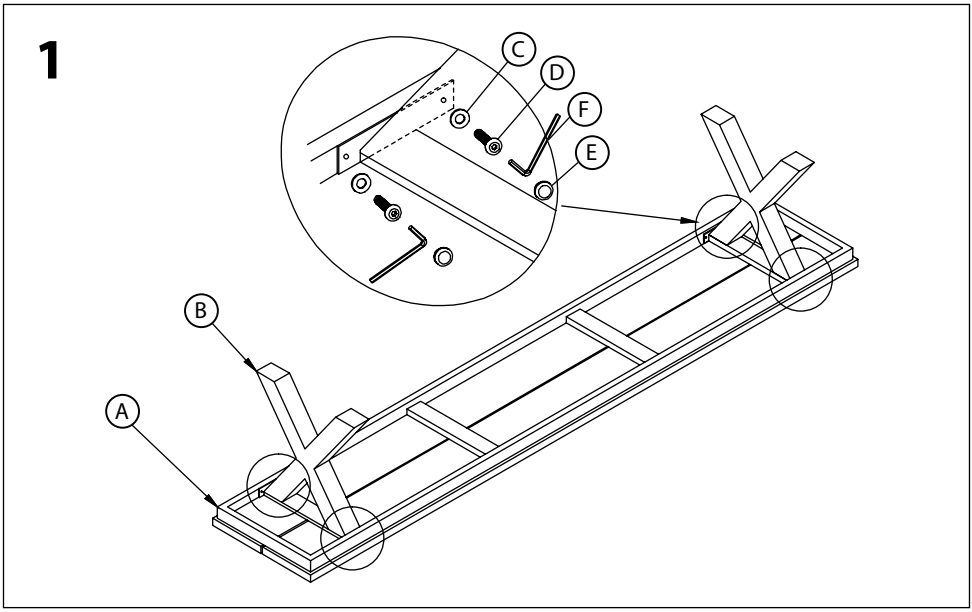

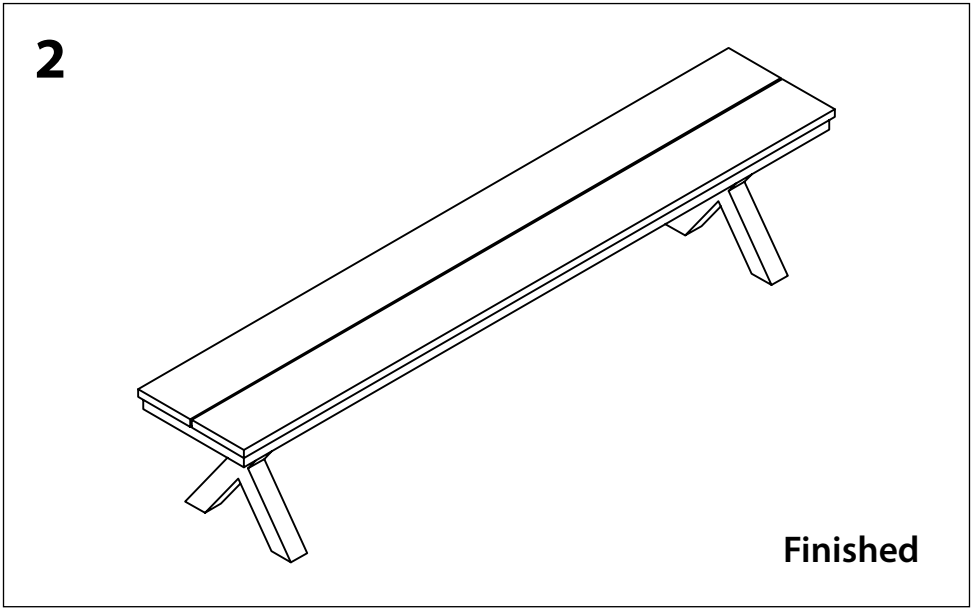

Maintenance and Care Instructions

- This product may only be used for its intended purpose for residential premises. Any other uses may affect the warranty.
- Kettler furniture is designed to be left outdoors all year round (excluding cushions). Cushions should be stored in a dry ambient temperature when not in use. Failure to comply with the outlined care instructions for the cushions will result in the warranty being invalidated.
- Kettler cushions are not suitable for dry cleaning and are not machine washable. Sponge clean only. We recommend the use of the Kettler fabric care kit to clean and protect your cushions. This is available to purchase form the Kettler website.

We recommend to maintain and lengthen the life of this product you follow the below regime:

On wood areas:

1. Ensure the product is clean. If the product is clean you can go straight to stage 2. Cleaner is only required if it hasn't been treated for 6-12 months.

Use our Hardwood cleaner: First moisten the wood with water. Apply the HARDWOOD CLEANER with a soft cloth or sponge. Allow to soak for 3 minutes. Brush the furniture clean with a scrubbing pad in the direction of the grain. Rinse furniture well with water.
We recommended that you treat your teak furniture with Hardwood cleaner when required.

2. Use Instant Grey Protector for elba: Apply a thin layer of Instant Grey Protector with a soft cloth. Allow to dry for 1 hour and then the wood has turned driftwood-grey. (If you wish to have a more intense grey colour, apply a second thin layer).
We recommended that you treat your teak furniture with Instant Grey Protector twice a year April & October.

3. Hardwood Shield on teak: Apply carefully by dabbing (rubbing damages the grey patina). Make sure the Hardwood is 100% dry and free of dust. Apply a thin layer of HARDWOOD SHIELD with a soft cloth. Allow to dry for one hour and then apply a second thin coat of HARDWOOD SHIELD. Let the wood dry for 48 hours before exposure to moisture and rain.
We recommended that you treat your teak furniture with HARDWOOD SHIELD twice a year April & October.

On aluminium parts:

We recommend the Kettler Multi-surface cleaner when necessary.
The Kettler after-care range available is available to purchase from the Kettler website.
Tree sap and bird droppings should be cleaned off immediately.

- Moving parts such as locking mechanisms, catches and joints need to be lubricated where necessary.
- Kettler furniture can be covered – we recommend that you use Kettler tailored covers (where available) or universal breathable covers.
- This product is 100% recyclable. At the end of the products life, please dispose of responsibly.
- Colours may vary slightly

⚠ Attention

Please be aware that painted/varnished surfaces can be damaged by sunscreens and oil based products. If the surface of your Kettler leisure furniture comes into contact with sunscreens, the surface is to be cleaned without delay as described above.
Only in this way can lasting discolouration of the surface by the ingredients of the sunscreen be prevented.

For Your Safety

- This product may only be used for its intended purpose as furniture for residential properties.
- Check all components regularly for correct function, damage and loose connections especially at the start of the season and at 1-2 month intervals dependent on use.
- Damaged components may endanger your safety or shorten the life of the product. Replace all damaged parts immediately. Use only spare parts manufactured by Kettler. Should you wish to purchase spare parts, they can be ordered directly from: **www.kettler.co.uk/shop**
- Kettler will not be responsible for damaged caused by improper use.

⚠ Attention

- Whilst assembling this product keep out of the reach of children. (Choking hazard – contains small parts)
- Ensure that your working area is free of possible sources of danger, for example don't leave any tools lying around.
- Always dispose of packaging material in such a way that it may not cause any danger. There is always a risk of suffocation if children play with plastic bags!
- We reserve the right to make changes for technical reasons.

KETTLER

KETTLER 3 Year Warranty

Warranty For Home Use

This product is covered by a 3 year warranty against manufacturing faults. This warranty applies to domestic use only. It does not cover commercial use, mis-use or accidental damage.

To validate your warranty, register at **www.kettler.co.uk** and quote the product code from the front of this booklet.

www.kettler.co.uk